CIRCUIT DIAGRAM

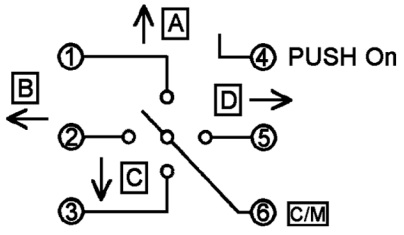

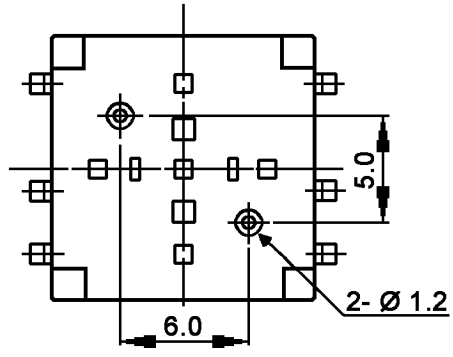

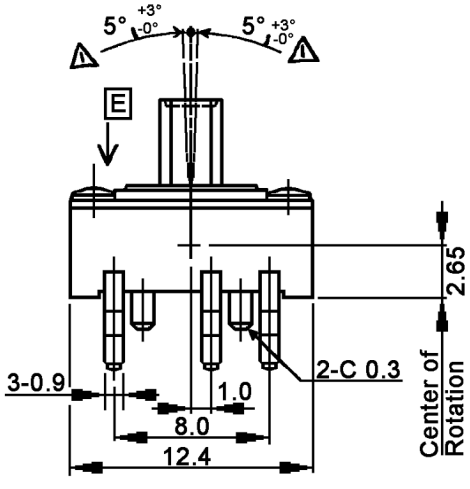

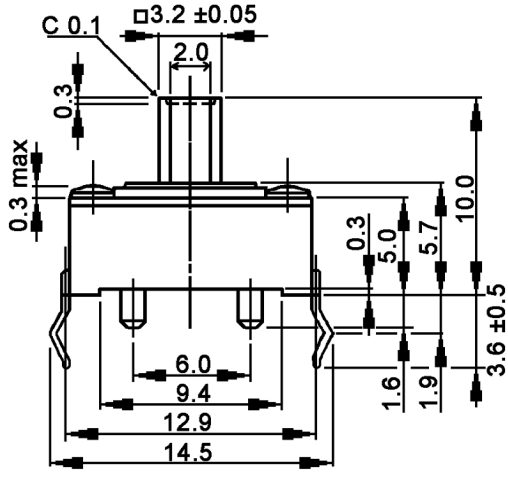

P.C. LAYOUT

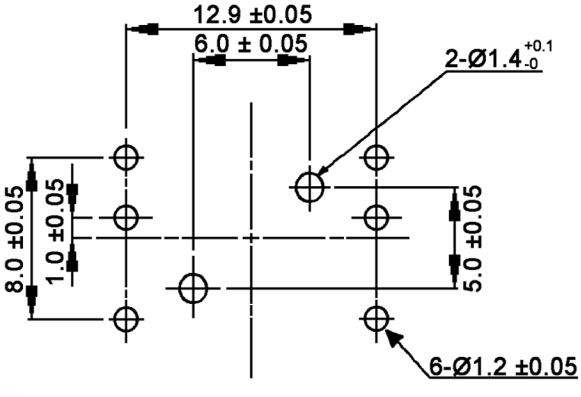

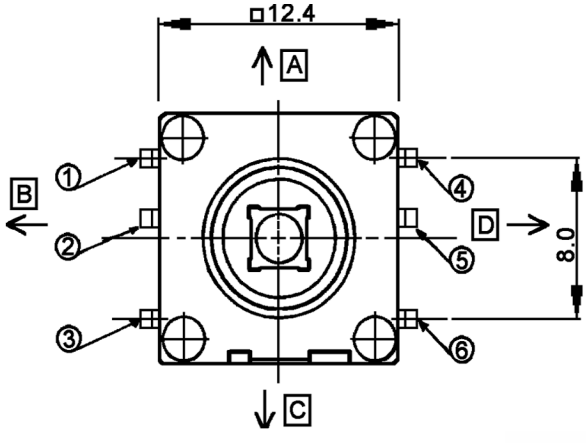

Specification:

Contact rating:	15V DC, 20mA
Contact resistance:	100mOhm max
Insulation resistance:	100MOhm min
Dielectric strength:	100V AC for the duration of 1 minute
Operating temperature:	-25°C to +70°C
Operating force:	center push: 350gf +100gf/-50gf
	4-directional: 250gf + 70gf/-50gf
Operating travel:	lever: 5 +3 -1
	push: 0,25 ±0,2 mm

Direction	Connection
A	1 - 6
B	2 - 6
C	3 - 6
D	5 - 6
E (push)	4 - 6

RoHS-conform · 2002/95/EC

Tolerances: ±0.3mm			Date	Name	TSJ 31
			07/04	us	
			knitter-switch	30 04 64	Page
General tolerances	10/10	dr			1/1
Modifications	Date	Name			